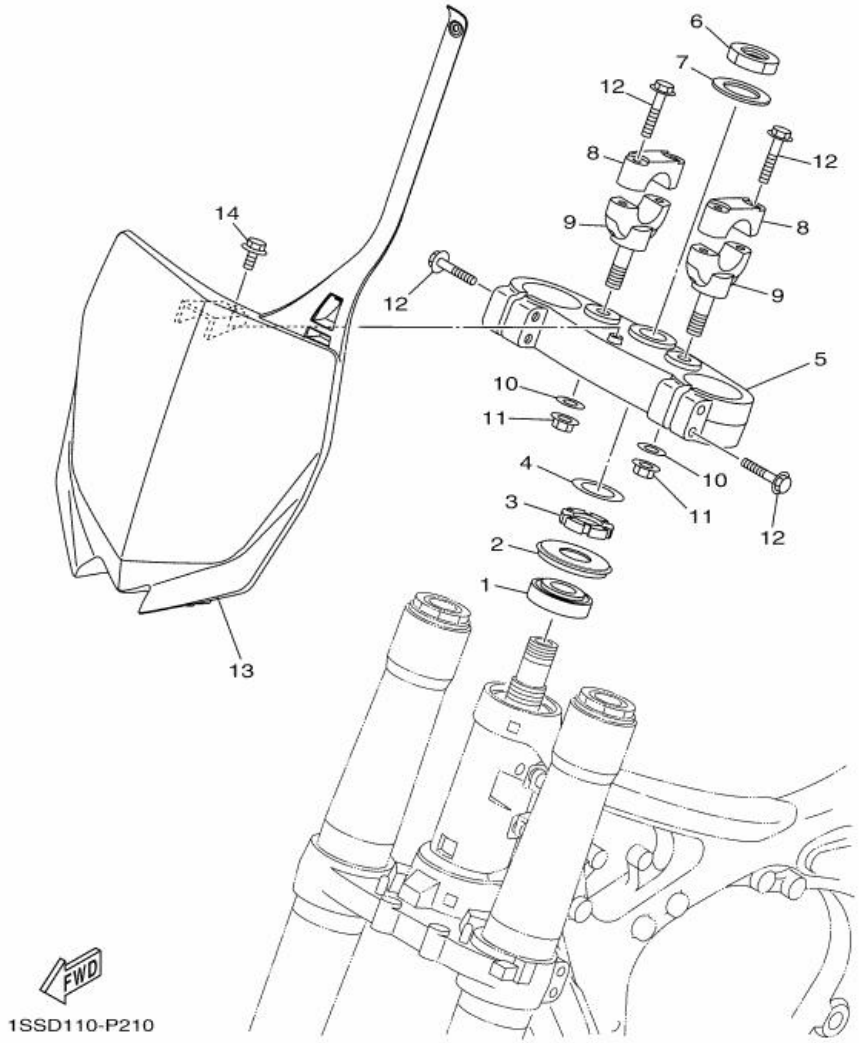

Fig. 21 STEERING

Ref. No.	Part No.	Description		Remarks
1	93332-00068	BEARING	1	
2	4EW-23416-00	COVER, BALL RACE 2	1	
3	90179-28013	NUT	1	
4	90201-286K9	WASHER, PLATE (T1.0)	1	
5	1SS-23435-00	CROWN, HANDLE	1	
6	90170-24003	NUT	1	
7	90201-24016	WASHER, PLATE	1	
8	18P-23441-00	HOLDER, HANDLE UPPER	2	
9	1SS-23442-00	HOLDER, HANDLE LOWER	2	
10	90201-12028	WASHER, PLATE	2	
11	95602-12200	NUT, SELF-LOCKING	2	
12	90105-08134	BOLT, FLANGE	8	
13	1SR-23485-00	PLATE, NUMBER	1	
14	90105-06203	BOLT, FLANGE	1	

Copyright(C) 2009 YAMAHA MOTOR CO. LTD. JAPAN All rights reserved